

DETAIL A

SCALE 4 : 1

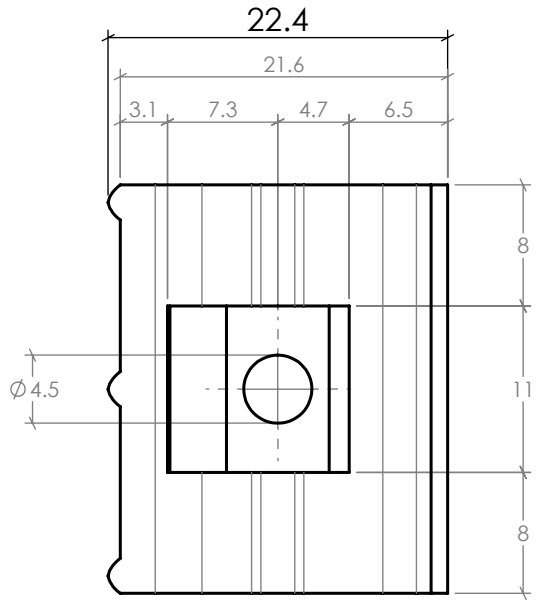

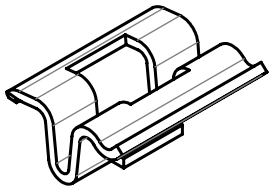

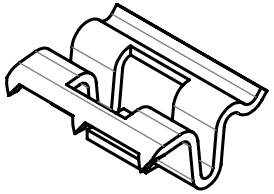

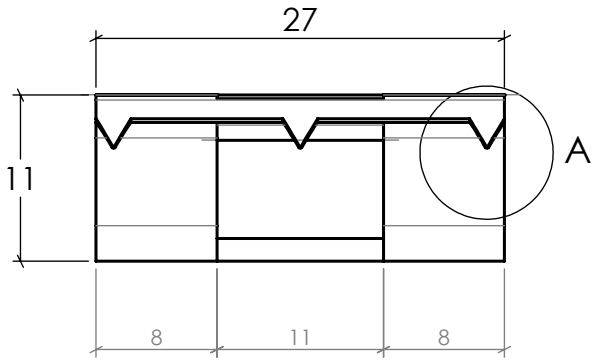

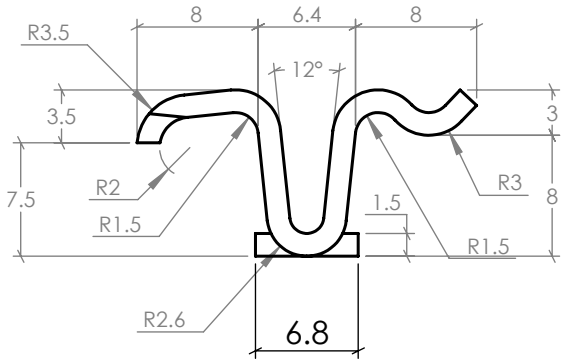

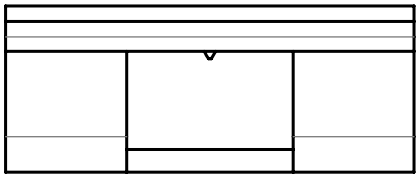

*Measurements in **mm**

STYLE	AS / AISI 304 SS	**MOSO ASYMMETRIC FASTENER** FOR 20 mm BOARDS	**rev.** V1	**PRODUCT CODE** CLIP-SCREW-BX08	MOSO International BV Adam Smithweg 2 1689 ZW Zwaag (NL) info@moso.eu	**SCALE** 2:1
BUILD-UP	STRIP STEEL, 1.5 mm					**SIZE** A4
		OTHER SPECIFICATIONS:		**DIMENSIONS** 27 x 22.4 x 11 mm		
SURFACE	MATT	- Thickness of steel: 1.4 - 1.5 mm - Thickness with coating: 1.5 - 1.6 mm				
FINISH	POWDER COATING			**PLACE & DATE** ZWAAG (NL), 11-9-2023		**PAGE** 1-1
COLOUR	- BROWN (RAL 8014)					