MOSO® Bamboo Outdoor Decking
Installation instructions

Planning Your Deck: Before Installation

The MOSO® Bamboo Outdoor Lumber product offering has many profiles to make your dream project a reality. We offer 1X and 2X square stock lumber for many applications. Use it just like lumber!

1X square stock lumber:

- 1x4x8
- 1x6x8
- 1x8x8
- 1x12x8

Uses: trim, fascia, drink rails, or creative privacy screens



2X square stock lumber:

- 2x2x8
- 2x4x8
- 2x6x8

Uses: trim, railing, privacy screens, balusters, pergolas, or other creative uses



PRO TIP: MOSO® siding makes for an attractive ventilated deck skirt!



Local building codes must always be consulted when building an exterior deck. Most municipalities require building permits.

moso BAMBOO OUTDOOR

Storage and Handling

Storage

The conditions during transportation and storage can affect the quality of the bamboo. To ensure the best quality of the material, the following recommendations should be followed:

- Transport and store material in the original packaging.
- Take care throughout to protect the edges and corners of the material from cracking or chipping.
- Store in a dry, ventilated place, protected from sunlight and precipitation, ideally indoors or in a covered environment.
- Prevent stacking against walls.
- Place on a dry, level surface raised off of the ground with a pallet or using evenly distributed battens.
- No objects should be stored on top of the material.

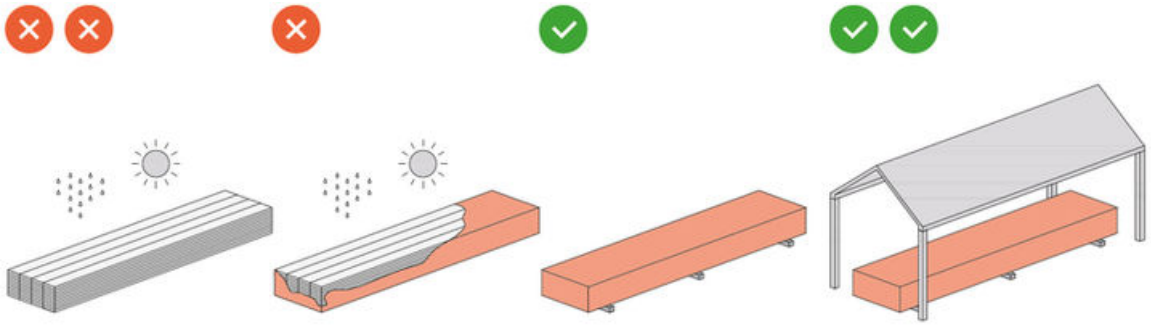

Handling

- Lift planks off the stack instead of dragging them to prevent scratches on the surface.
- Turn the boards to the side to minimize bending during handling.
- Handle and install the product with care to prevent damages to the material and surroundings.

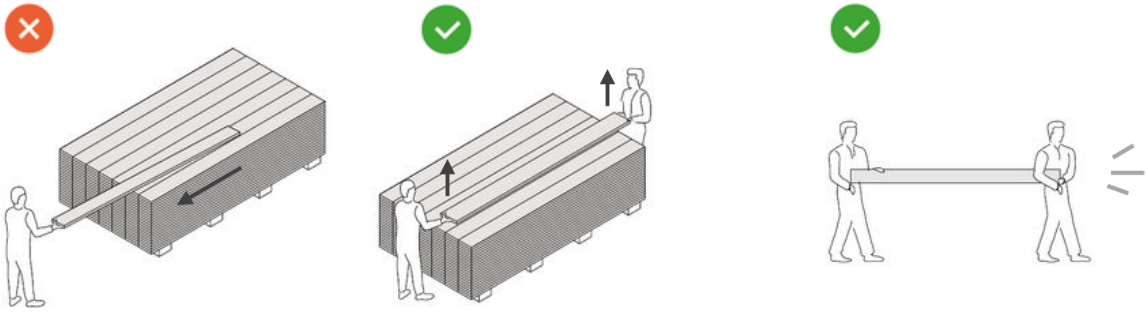

Cleaning

To prevent water streaking after installation, it is recommended to clean the surface of the product before installation to remove any dust remaining from production or accumulated during transportation or storage. This can be done by wiping the surface with a damp cloth or blowing with compressed air.

moso BAMBOO OUTDOOR

Environment and Weathering

A. Sun exposure

As with any other exposed wood-based product, the color of Bamboo Thermo® gradually fades, changing into a silver- grey tone due to ultraviolet radiation from the sun. The more solar radiation the deck is exposed to, the sooner the signs of photodegradation will appear.

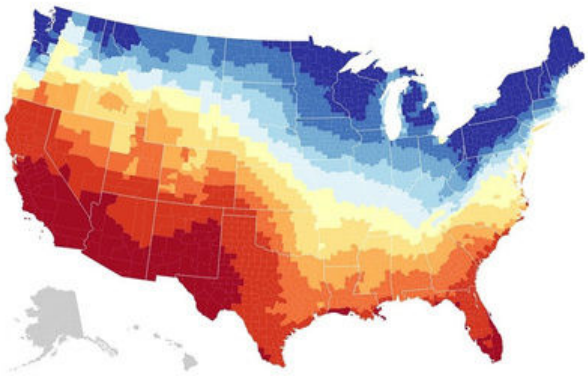

B. Orientation

In the northern hemisphere, decks facing south, southeast and west are exposed to direct sunlight for many hours a day, causing them to weather relatively quickly and unevenly.

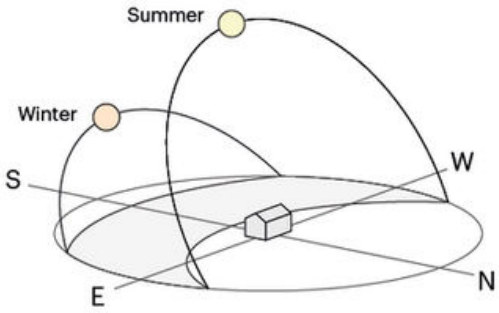

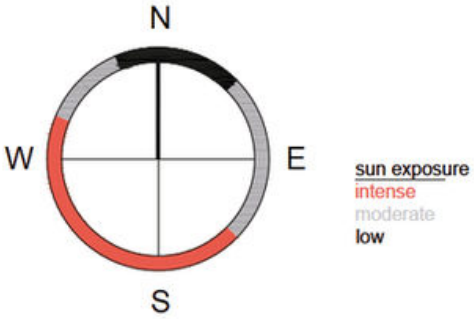

By contrast, decks facing north tend to weather more slowly and uniformly because they are not directly exposed to sunlight. For this reason, facades facing north may also be prone to mild mildew or airborne algae growth.

C. Rainfall and MOSO Bamboo Decking

Rain is a key factor in the weathering of MOSO Bamboo Decking. It accelerates weathering by washing away UV-damaged fibers and increases the risk of mold in damp, poorly ventilated areas. To maintain durability, proper drainage, airflow, and moisture control are essential—especially in regions with heavy rainfall.



moso BAMBOO OUTDOOR

Planning Your Deck: Before Installation

Plan to install the decking boards with a slope of 1-2% to allow water to run off the surface.



- Decking installed without slope may result in surface water pooling which may result in water staining and premature fissures in the decking surface.

MOSO® Bamboo Outdoor can be installed very close to the ground, as little as 4” above permeable surfaces.

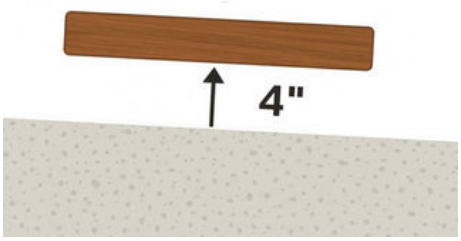

- It is highly important that *adequate airflow and drainage* is planned for and achieved. Pooling water or stagnant airspace will result in moisture issues that may cause failure. These issues can be avoided by adding sand layers and gravel below the decking substructure.
- In applications where the deck is being built closer to wet ground, a vapor barrier is recommended to prevent water from absorbing into the underside of the material. Additionally, the area must be sloped to allow water to drain away.

Be sure to order finished edge boards (1-groove) for for the perimeter, stair treads, etc. Available in 6” or 8”. Contact your supplier for options.





moso BAMBOO OUTDOOR

Planning Your Deck: Before Installation (Cont.)

Because of the stability of MOSO Bamboo Outdoor decking and the shape of the end-match system, **no expansion gap is needed on the ends of the boards.**

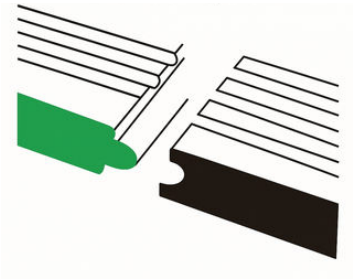

- If building a new deck frame, plan joist spacing at 12", 18", or 24" OC and seam boards on joists. DO NOT seam off-joist at 18" or 24".
- **MOSO® decking can also be installed on 16" OC framing.** Run decking like flooring, seam off-joist and add (float) a spacer clip on either side of each seam to keep boards aligned as the deck framing shrinks and swells.
- **Proper blocking is recommended at minimum every 72"** to prevent movement of the joists which can result in separation at the ends of the deck boards.





- **Experiment with the layout.** Ensure the end user approves the seam layout. Staggered or in-line joints should be discussed prior to final install.
- **When decking installation is on an angle or a random pattern is desired, the joist spacing should be 12" OC.** Determine the final joist spacing only after talking with an engineer or local building code officials.

moso BAMBOO OUTDOOR

Tips, Tools, & Safety

Drilling, sawing, sanding, and machining MOSO® Bamboo Outdoor Lumber will generate very fine dust. **Avoid inhaling dust by wearing a dust mask.** Contact MOSO for MSDS information.

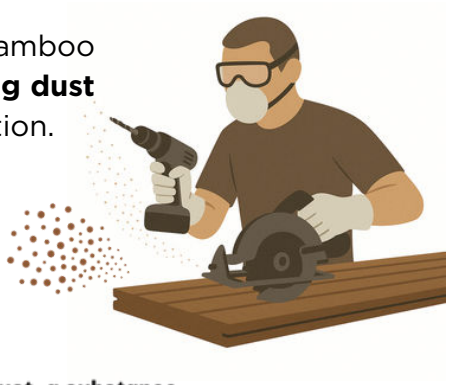

Thermo(R) MSDS
N-durance(R) MSDS

WARNING

Drilling, sawing, sanding or machining wood products can expose you to wood dust, a substance known to the State of California to cause cancer. Avoid inhaling wood dust or use a dust mask or other safeguards for personal protection. For more information go to www.P65Warnings.ca.gov/wood.

This product can expose you to Formaldehyde, which is known to the State of California to cause cancer. For more information go to www.P65Warnings.ca.gov.

Required Tools:

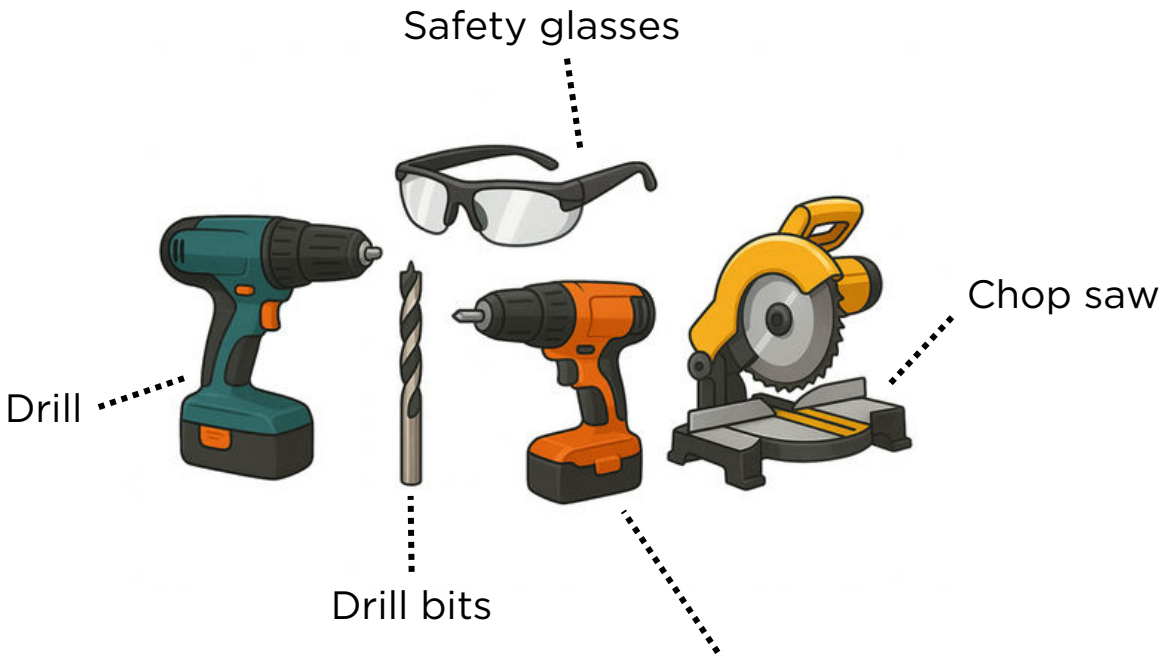

- Use screw gun with ratcheting torque setting
- Avoid impact drivers which will snap screws

moso BAMBOO OUTDOOR

Tips, Tools, & Safety (Cont.)

MOSO® Bamboo Outdoor Lumber can be crosscut with a quality chop saw using a **carbide-tipped fine finish blade**.

Ripping can be done on a standard table saw using a properly aligned quality fence with a carbide-tipped blade.

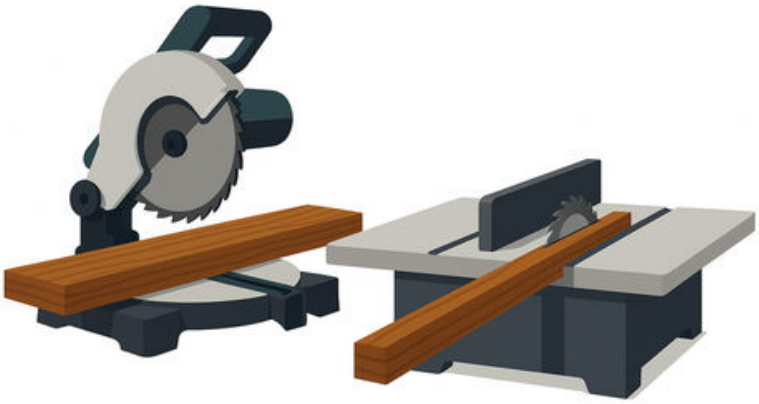



ex. Diablo Fine Finish Blade

MOSO® Bamboo Outdoor Lumber can be routed or planed with high-speed steel or carbide cutters.





When required, only sand in the direction of the grain using a belt sander or square palm sander.

Never use an orbital sander.



Pro Tip: If you wish to replicate the bevel on the ends of boards a 45 degree chamfer bit in a trim router will work nicely.



moso BAMBOO OUTDOOR

Tips, Tools, & Safety (Cont.)



This product works like wood. It can be cut with any wood cutting tool: routed, planed, drilled, chiseled, etc. Carbide-tipped fine finish blades will last the longest.

A red carpenter's pencil makes the clearest, most readable mark on MOSO® Bamboo Thermo®.

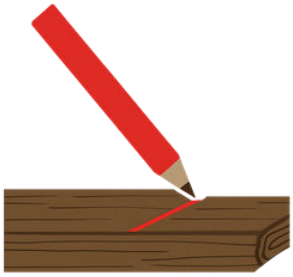



Another useful tool to have on hand is a standard metal file. This tool makes quick work of softening cut-corners, ripped edges, or sharp miters.

It is not required to use hardwood end-seal on MOSO® Bamboo Outdoor products. However, in very dry climates it may be advisable. If using end-seal, take care not to apply on the surface of the decking as it will repel the oil finish. Simply sand off if over-application occurs.





Titebond III Wood Glue can be used for joining miters or any other gluing purposes.

moso
BAMBOO
OUTDOOR

Decking Fasteners

MOSO® Asymmetric Fasteners will produce a 1/4” gap between boards.

- MOSO Asymmetric Fasteners are available in 90pc or 360pc boxes.
- MOSO Asymmetric Fasteners come in 305 or 316 stainless steel for salt-water contact.





If a narrower gap is desired, Deckwise® clips for grooved wood decking or Camo® fasteners are compatible as well.

- For steel framing applications, we recommend Camo® Wedgemetal Clips

Starborn Industries produces **Pro-plug® screws, plugs, and bits that match MOSO® Bamboo Outdoor Thermo® and N-durance®**. Be sure to ask your supplier for these. They will be needed for all starter boards, perimeter boards and stair treads.



MOSO® BAMBOO OUTDOOR touchup oil
Scan to order

N-durance® plugs are unfinished and will be lighter than the decking when installed. Be sure to request touch-up oil from MOSO® via this QR code:

moso
BAMBOO
OUTDOOR

Installation with MOSO® Asymmetric Fasteners

MOSO® Bamboo Thermo® has a reeded side and smooth side on their 6′ boards. Choose which side you prefer. Note: they can be used interchangeably (ie. reeded side on stairs or edge of deck and smooth for the main part of the deck)



or



MOSO® Bamboo N-durance® and Thermo® Rain-Shed decking (8′) has a cambered surface which is always the top side. The bottom side is identified by groove running the length of the board.

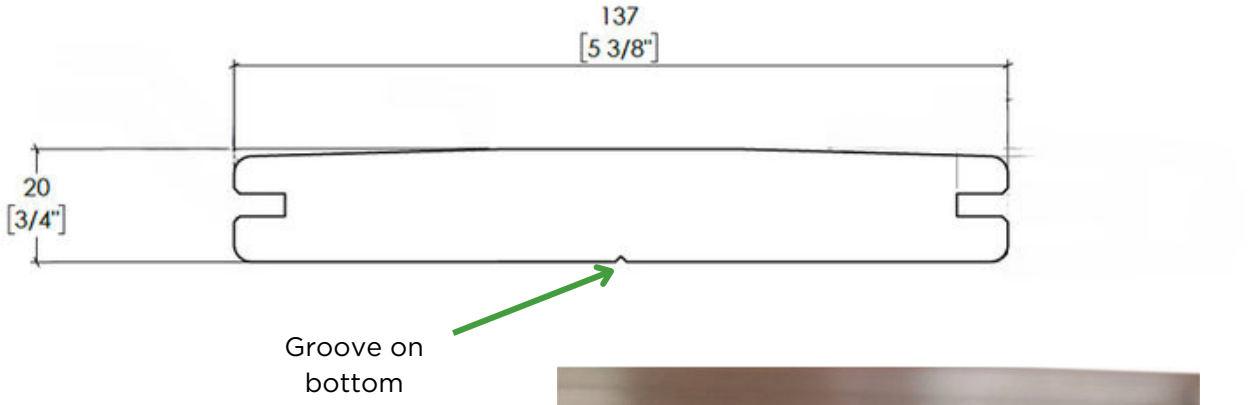



Rain-Shed surface extends time between maintenance periods. The cambered surface is virtually imperceptible underfoot.



moso
BAMBOO
OUTDOOR

How to use MOSO® Asymmetric Fasteners with deck boards:

MOSO® deck boards are 6ft long. If deck is framed at 16" O.C., deck boards will not seam on joist. This is no issue due to the structural T&G end-match of the boards.

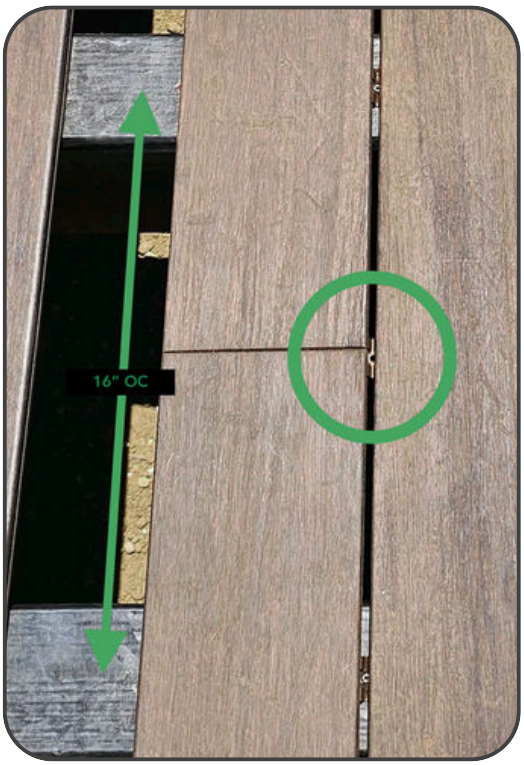

- MOSO® recommends installing a "floating" clip at the point where the seam falls between joists. This prevents the end-match from shifting laterally as the deck structure shrinks and swells.



Use standard decking layout method for starting your deck.

- Either start at the wall and work out to the edge -OR- start at your perimeter/edge board and work back toward the wall. Try to plan your build to allow minimal ripping of your final board.
- You will need to face fasten your starter and perimeter board. We suggest using Starborn Pro-Plug® screws and plugs to hide face fastening screws. Estimate 3-4 screws per board into joists along non-grooved edge.



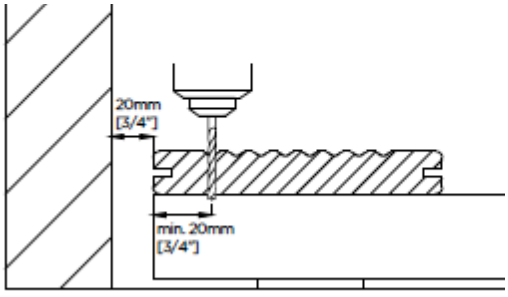

- **DO NOT USE AN IMPACT DRIVER WITH STAINLESS STEEL SCREWS.**

moso BAMBOO OUTDOOR

Press fastener with hooked side in the groove of one board.

- If using standard softwood framing, drive screws directly into framing.
- DO NOT USE AN IMPACT DRIVER WITH STAINLESS STEEL SCREWS.
- **Do NOT fully tighten the screw. F**ully tighten screws after next row of boards is in place. Apply low torque with slow screwing speed on the drill.
- Perform some tests for correct torque and speed adjustment before full installation.

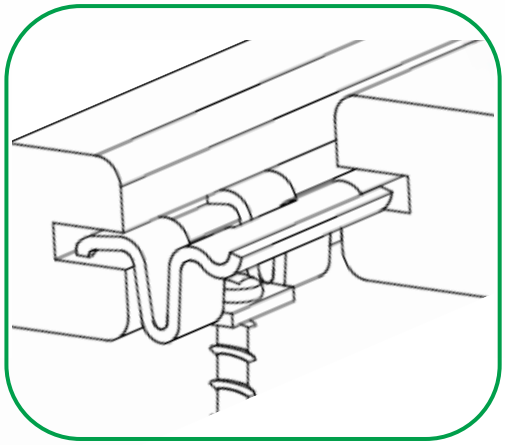

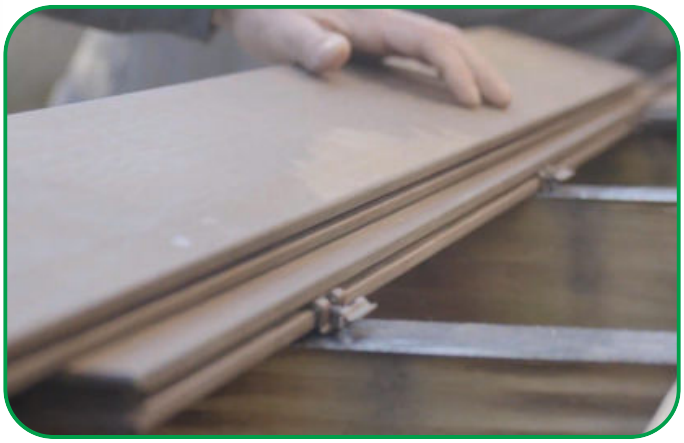

Install every following board by sliding it under the waved ("tongue") side of the fasteners.

- Fully tighten the screws when next row of decking is in place.

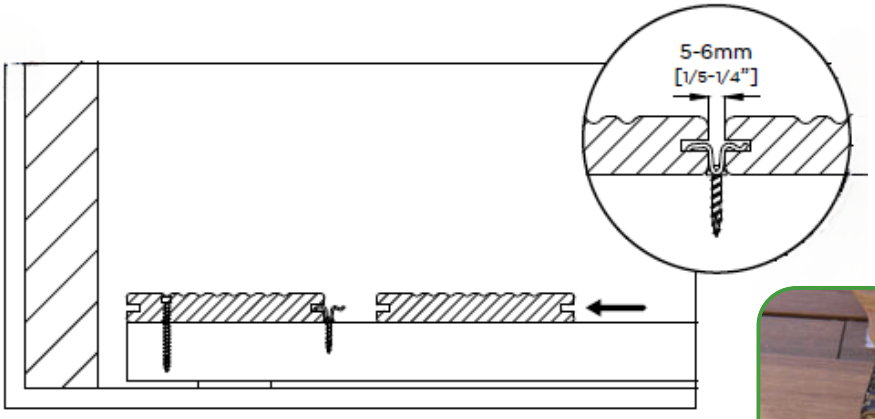



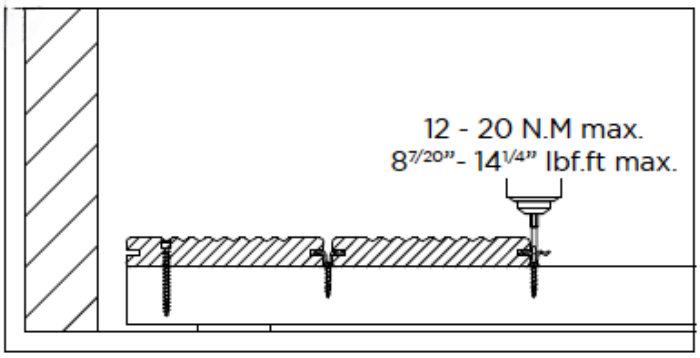

moso BAMBOO OUTDOOR

Fasteners

Only use the included stainless steel decking screws with fasteners (4.5 x 30 mm). There are 305 and 316 stainless steel screw options available. Use the SF coverage calculator below to gauge how many screws you will need.

~sf coverage/360pc box	Joist spacing OC			
decking width	12"	16"	18"	24"
4"	140sf	160sf	188sf	268sf
6" (5 3/8")	180sf	200sf	228sf	308sf

-sf coverage/90pc box	Joist spacing OC			
decking width	12"	16"	18"	24"
4"	35sf	40sf	47sf	67sf
6" (5 3/8")	45sf	50sf	57sf	77sf





If installing on Steel framing:

- Contact your supplier to order SCREW-BX11-01. This screw is compatible with MOSO® BX08 Asymmetric clips.
- Alternatively, you may use any #6 trim head self-tapping screw designed for use with metal.
- MOSO® also recommends CAMO Edge-X clips for steel framing. This clip will provide a 3/16" gap. Click the link below for more information.

WEDGEMETAL™ Clips

Install grooved decking up to 5X faster when you use CAMO Hidden Fasteners. WEDGEMETAL™ Clips are for grooved wood, composite, and PVC deck board installations on metal joists. The WEDGEMETAL™ Clips work with any 14–18GA...

CAMO Fasteners

moso BAMBOO OUTDOOR

Face Screw Installation

Face screwing should only be necessary for perimeter boards, stair treads, and custom applications. Field decking should be installed with our asymmetric clip fasteners.

If you *do* intend to face screw your deck, ask your supplier for our 1x6 square stock lumber (SKU BX2-LU166-UF). This board does not have end-match and is 73” long, so be sure to space joists accordingly.

- Note: Some distributors in the US now have 8ft square edge 1x6 square stock lumber (BX2-LU168-UF).





Face-screw installation is <u>not recommended</u> for MOSO® Bamboo N-durance® field decking due to the cambered surface.

Pre-drill the screw holes a minimum of 3/4” from the edge side of the board. Be sure to pre-drill with a large enough drill (80% - 90% of screw diameter) to reduce resistance on the screw and avoid snapping the screws or splitting of the decking.

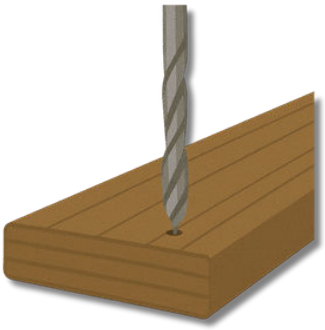

We recommend using a countersink bit with a positive stop.

- Screws should be 305 grade stainless steel.
- Saltwater contact may require 316 grade stainless steel; please consult local building codes.



moso BAMBOO OUTDOOR

Best Practices

Ensure that there is adequate airflow below the deck, especially when installing close to ground level. Even though MOSO® Bamboo Decking can be installed closer to the ground than any other natural material, proper air flow is a separate issue and can have an adverse effect on the deck if not properly done.

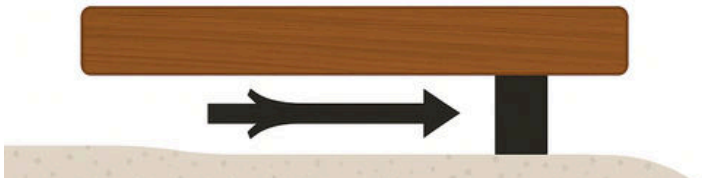



Don't forget to float a fastener at the end-match when floating the joint. The fastener will provide added support and helps to maintain proper spacing between the boards. This applies to the decking as well as the siding.

It is not necessary to finish Bamboo Thermo® upon installation. If you would like to finish it, wait 10-12 weeks after installation. If you want to maintain the unfinished look of Bamboo Thermo®, MOSO® recommends cleaning the deck with Messmer's Deck Cleaner.



Finishing with **Messmer's MOSO® Bamboo Oil** will create a darker chocolate tone of MOSO® Bamboo Outdoor Thermo and help to repel dirt, water, and stains.





For MOSO® Bamboo N-durance®, clean the deck with Woca Exterior Wood Cleaner. Finishing with Woca Exterior Wood Oil will bring back the warm, amber color. You can also use Messmer's MOSO® Bamboo Oil.

MOSO® Bamboo Outdoor Decking has similar properties to outdoor-rated exotic hardwoods like Ipe. Installation methods, care, and performance characteristics will be similar. See our cleaning and maintenance instruction guide for more details

If you still have questions, please reach out to us:
phone: 855-343-8444
email: info@moso-bamboo.com

moso BAMBOO OUTDOOR